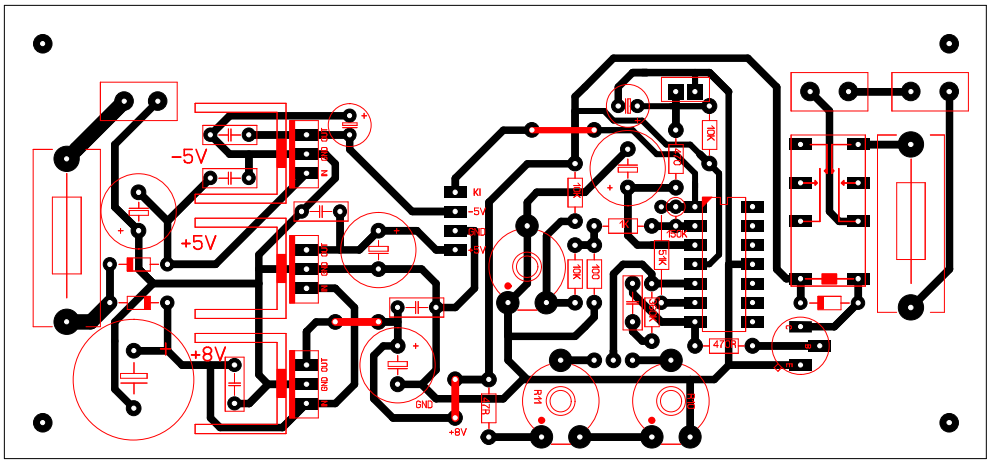
-5V
+5V
+8V
GND OUT
GND
IN
KI
-5V
+5V
GND
+8V
10K
10K
10K