GPIB BOARD 22

ASSEMBLY A22

CIRCUIT NUMBER	SCHEM LOCATION	BOARD LOCATION	CIRCUIT NUMBER	SCHEM LOCATION	BOARD LOCATION	CIRCUIT NUMBER	SCHEM LOCATION	BOARD LOCATION	CIRCUIT NUMBER	SCHEM LOCATION	BOARD LOCATION
DS4540	3N	1B	DS4545	4P	2B	P4540	3M	1A	W4540	4M	1A
DS4542	4N	1B									

ASSEMBLY A23

CIRCUIT NUMBER	SCHEM LOCATION	BOARD LOCATION	CIRCUIT NUMBER	SCHEM LOCATION	BOARD LOCATION	CIRCUIT NUMBER	SCHEM LOCATION	BOARD LOCATION	CIRCUIT NUMBER	SCHEM LOCATION	BOARD LOCATION
C4530	2J	3B	Q4745	7L	4E	R4743	7K	4E	U4706B	5J	1E
C4636	1M	3D							U4706C	8E	1E
C4637	2L	4D	R4501	2B	1A	U4501	4B	2B	U4706D	5E	1E
C4638	1M	4D	R4502	1B	2A	U4505	2B	2B	U4708	3E	1F
C4644	2M	4D	R4503	2B	2A	U4525	1J	3B	U4710	8H	3D
C4645	3L	4D	R4510	1B	2A	U4601	6C	2C	U4715	8J	3E
C4805	7L	2G	R4512	2B	2A	U4605A	5C	2C	U4730A	4L	4D
			R4513	4B	2A	U4605B	4C	2C	U4730B	4L	4D
C4525	2N	2A	R4515	2B	2A	U4605C	4C	2C	U4730C	3L	4D
C4526	2P	2A	R4521	1D	2B	U4606A	5D	2C	U4730D	5M	4D
C4527	1E	3A	R4523	1D	3B	U4606B	5C	2C	U4735A	7G	4E
C4530	1E	3A	R4525	2H	3B	U4606C	8C	2C	U4735B	7G	4E
C4631	1E	3A	R4526	2H	3B	U4606D	9D	2C	U4735C	7G	4E
C4632	1E	3B	R4531	2H	3B	U4606E	5D	2C	U4735D	6K	4E
C4633	3M	2A	R4533	1F	4B	U4606F	8B	2C	U4738A	9E	4F
C4634	2M	4A	R4534	1J	4B	U4608	8C	2D	U4738B	5D	4F
C4640	2N	4A	R4535	2J	4B	U4621	1L	3C	U4738C	6G	4F
C4641	2P	4A	R4543	3M	4A	U4625	3F	3C	U4801	6J	2F
			R4544	4M	4A	U4628	4F	3C	U4805	5P	2G
J4540	3M	3A	R4545	4M	4A	U4631	2K	4C	U4805	6P	2G
J4800	6S	1F	R4646	1K	4B	U4635A	1N	4C	U4808	10P	2G
			R4547	2M	4B	U4635B	1M	4C	U4808	5P	2G
P4238	1A	1A	R4548	1E	4B	U4635C	2N	4C	U4811	8G	3F
P4238	1S	1A	R4549	2N	4B	U4635D	2M	4C	U4818	9N	3G
P4243	2A	1B	R4550	2P	4B	U4641A	2L	4C	U4831A	7B	4F
P4243	5S	1B	R4615	2G	3D	U4641B	1D	4C	U4831B	5H	4F
P4500*	1B	1A	R4630	3P	3B	U4701	7M	2D	U4831C	5E	4F
P4500*	1P	1A	R4635	1P	2A	U4705A	8C	1E	U4831D	6F	4F
P4508*	2B	1B	R4731	2K	3E	U4705B	7C	1E	U4838A	7L	4F
P4509*	5P	1B	R4732	5K	3E	U4705C	6G	1E	U4838B	7F	4F
			R4734	6K	4E	U4705D	4E	1E			
Q4743	6L	4E	R4735	6K	4E	U4706A	6E	1E			
			R4740	7K	4E						

Partial A23 also shown on diagram 23.

CHASSIS MOUNTED PARTS

CIRCUIT NUMBER	SCHEM LOCATION	BOARD LOCATION	CIRCUIT NUMBER	SCHEM LOCATION	BOARD LOCATION	CIRCUIT NUMBER	SCHEM LOCATION	BOARD LOCATION	CIRCUIT NUMBER	SCHEM LOCATION	BOARD LOCATION
P4800	6S	CHASSIS	W4800	10S	CHASSIS						

*This circuit number appears on earlier board versions.

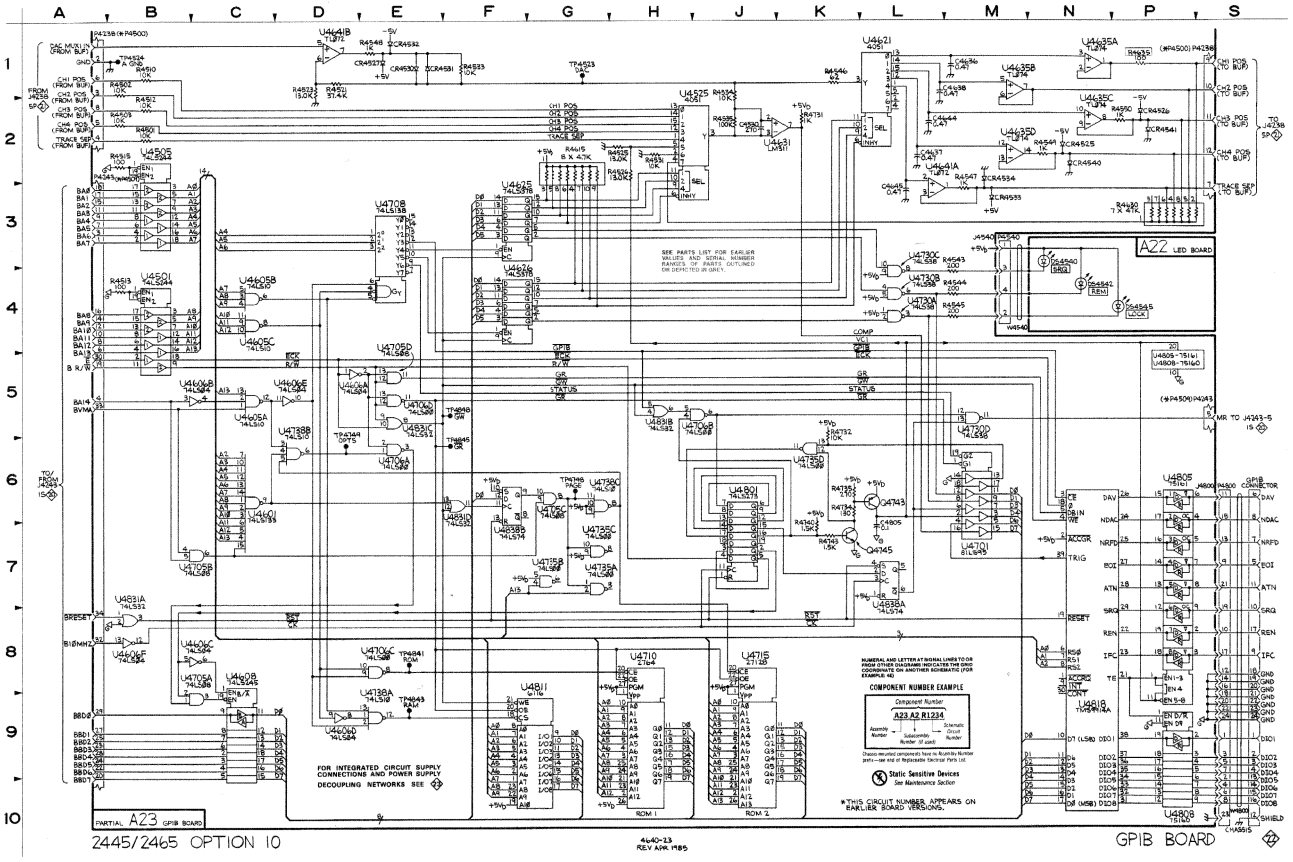

2445/2465 OPTION 10

4640-23
REV APR 1985

GPIB BOARD 22