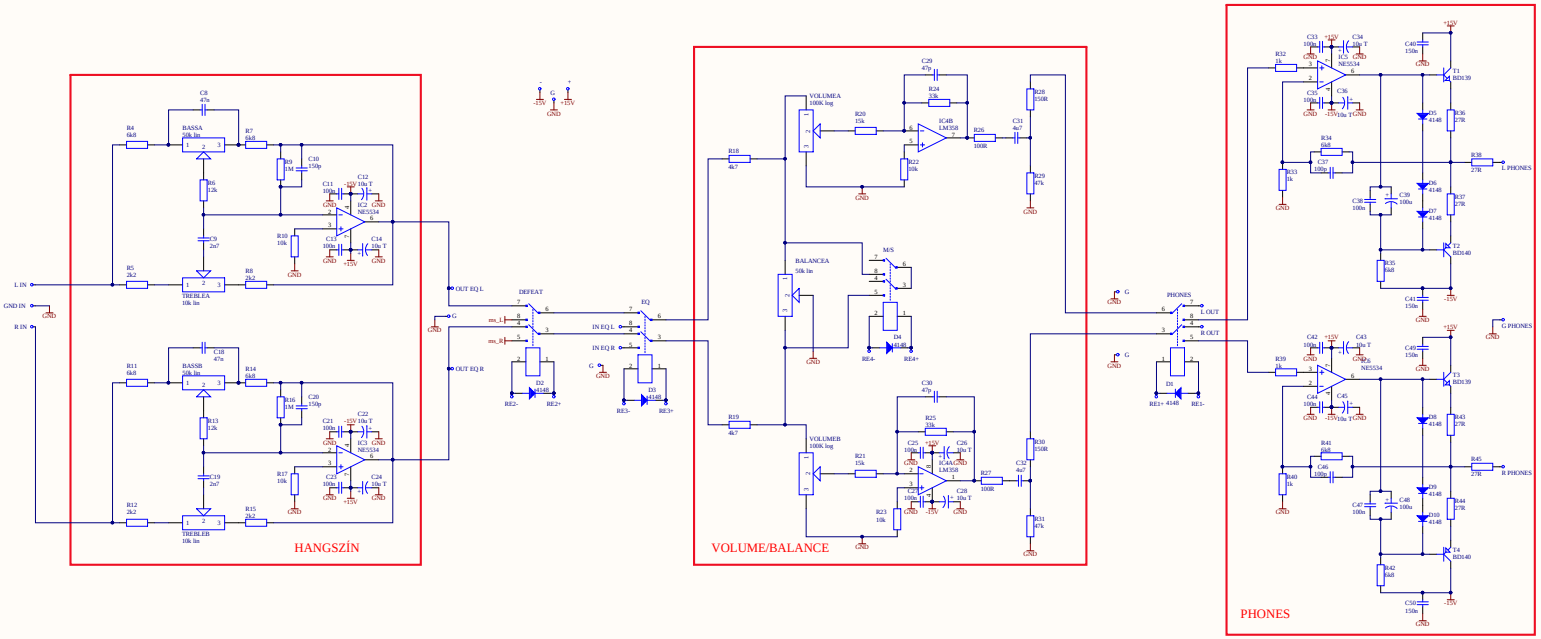

Title		
Size: A1	Number	Revision
Date: 2022.10.21.		Sheet of
File: E:\Ayszek_Dhz-1025.SchDoc		Drawn By: