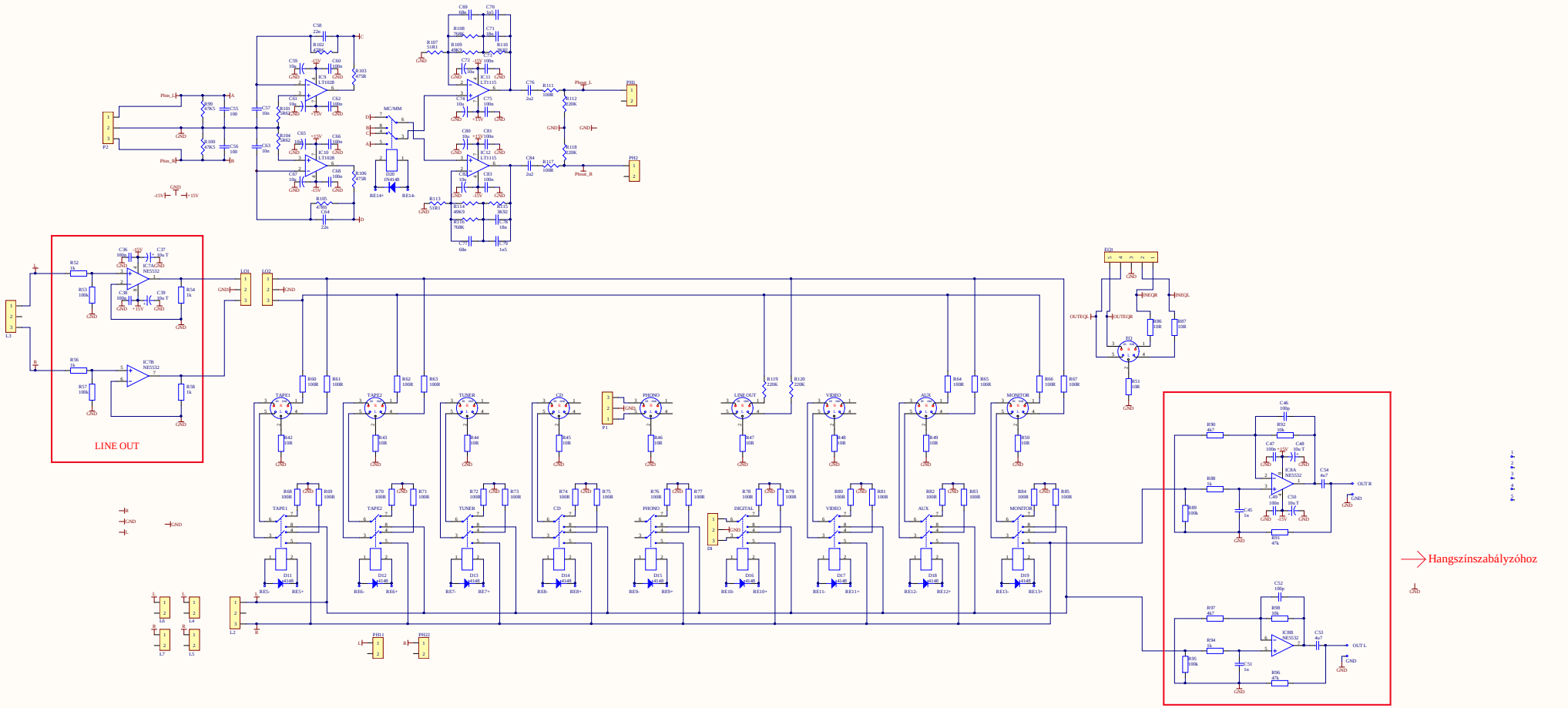

Title			
Size: A1	Number		Revision
Date: 2023.09.30.		Sheet of	
File: E:\Ayumi\s_ostav_Sound\Nyl.Dsn		Drawn By:	