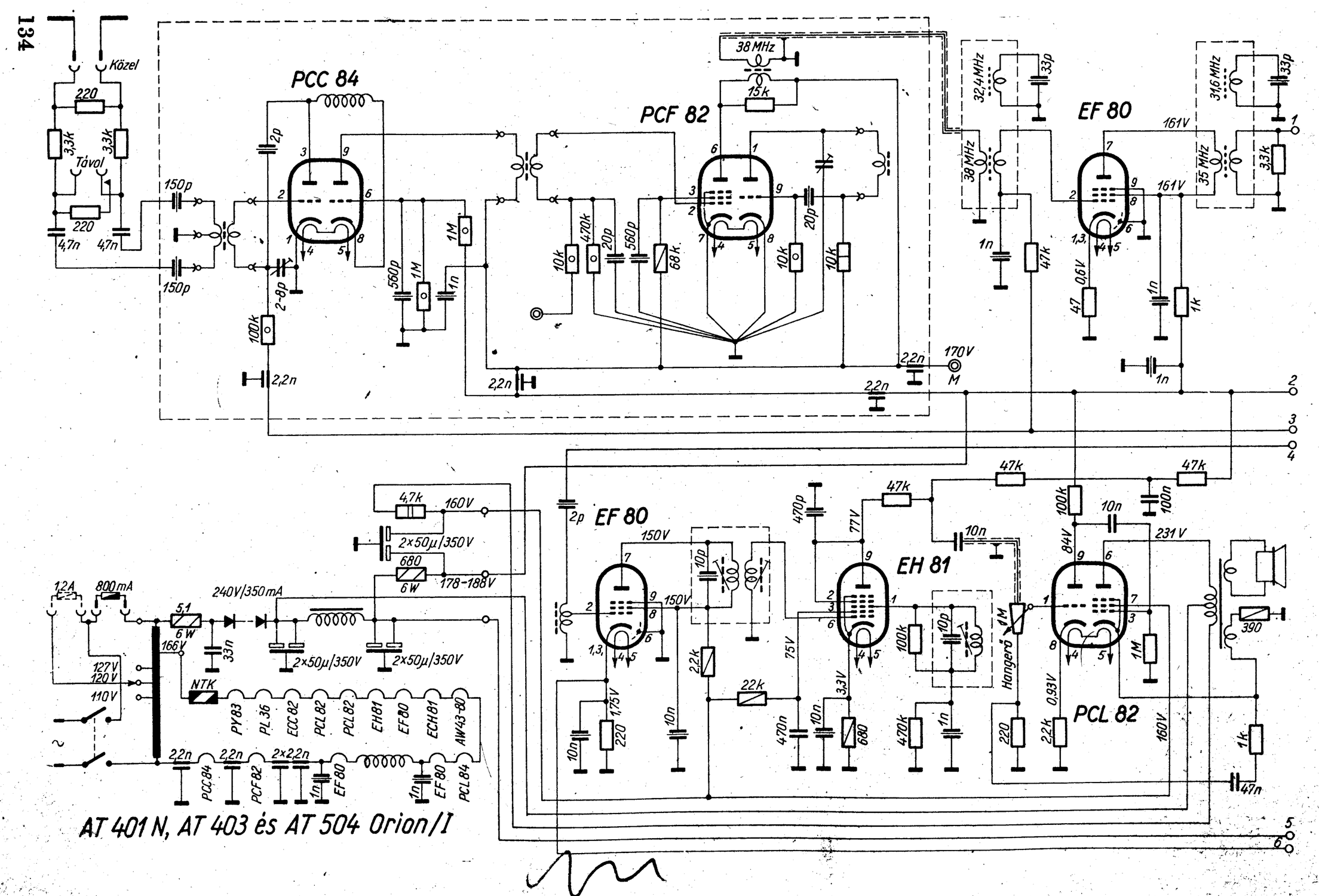
Közel
Távol
220
3,3k
4,7n
150p
PCC 84
2p
2-8p
100k
2,2n
560p
1M
1n
PCF 82
38 MHz
15k
10k
4,70k
20p
68k
170V
M
32,4 MHz
33p
38 MHz
1n
47k
EF 80
161V
0,6V
47
1k
31,6 MHz
35 MHz
EF 80
150V
10p
2,2k
22k
470p
77V
75V
3,3V
680
470n
EH 81
100k
470k
Hangerő
1M
PCL 82
84V
10n
100n
231V
0,93V
160V
390
47n
4,7k
160V
2×50μ/350V
680
6W
178-188V
1,2A
800mA
240V/350mA
5,1
33n
166V
127V
120V
110V
NTK
PY83
PL 36
ECC 82
PCL 82
EH81
EF80
ECH81
AW43-80
2,2n
2×2,2n
PCC84
PCF82
EF80
PCL84
AT 401 N, AT 403 és AT 504 Orion/I

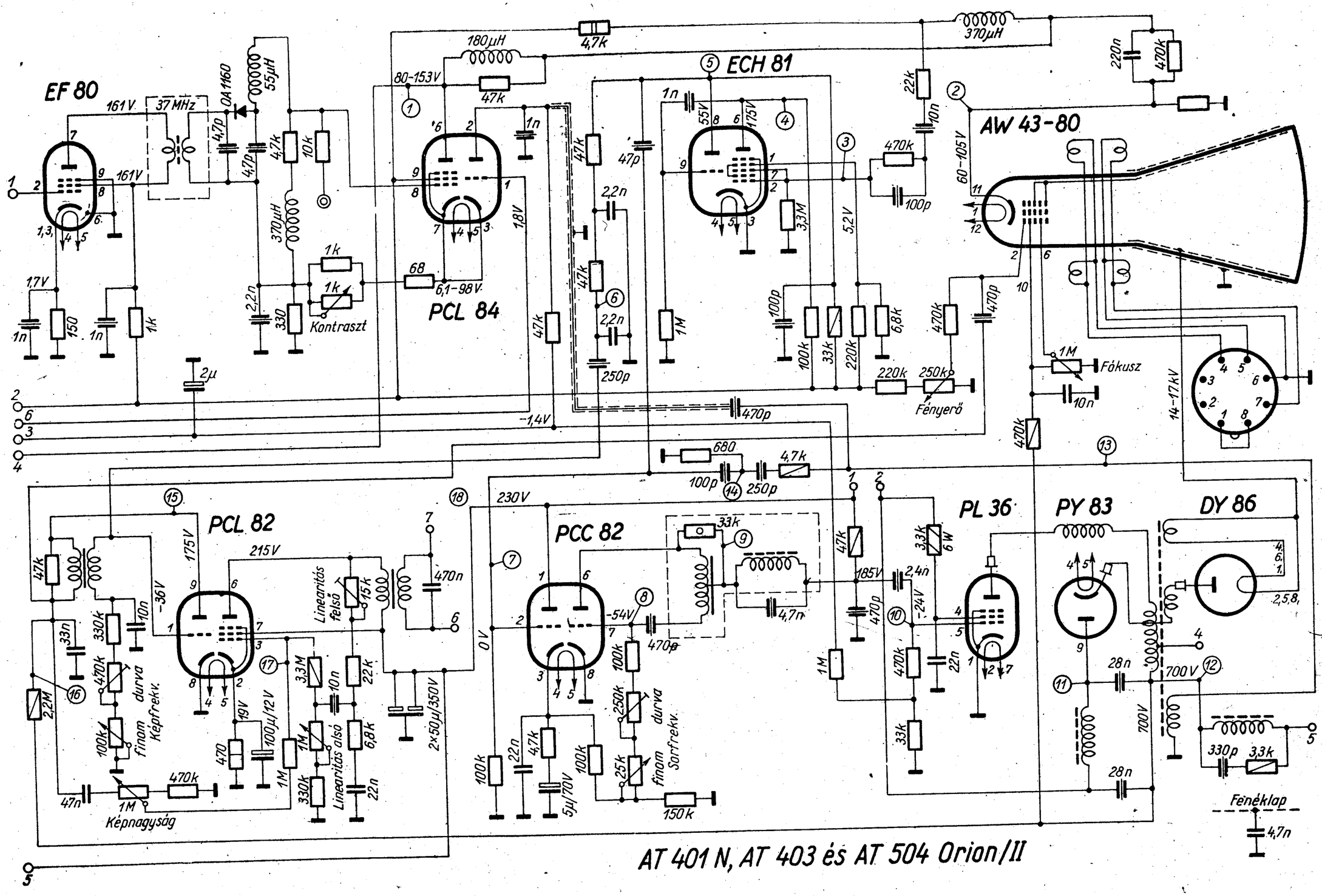

AT 401 N, AT 403 és AT 504 Orion/II