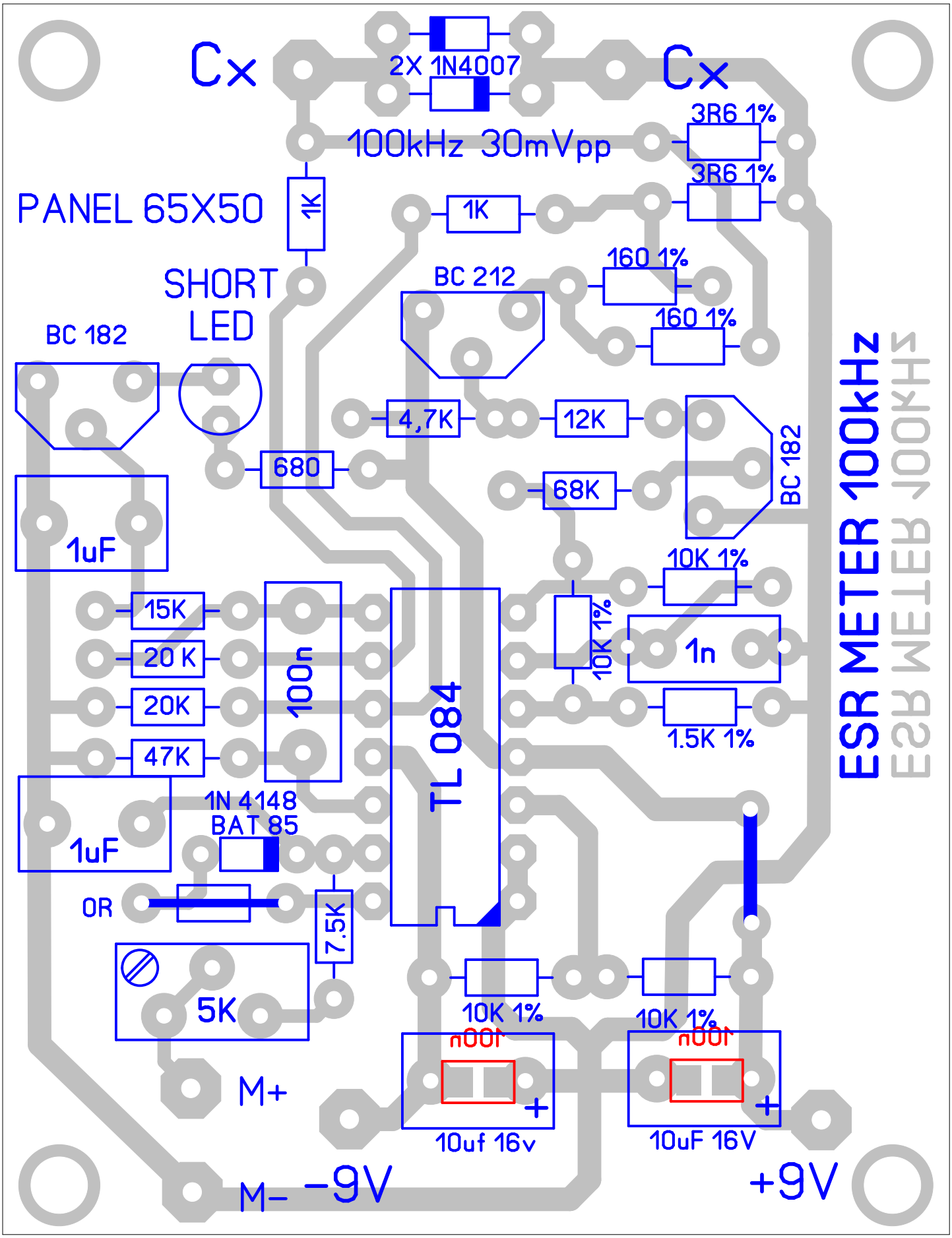
Cx
2X 1N4007
Cx
100kHz 30mVpp
3R6 1%
3R6 1%
PANEL 65X50
1K
1K
SHORT
LED
BC 212
160 1%
160 1%
BC 182
4,7K
12K
680
68K
BC 182
1uF
10K 1%
15K
20 K
20K
47K
100n
TL 084
10K 1%
1n
1.5K 1%
1uF
1N 4148
BAT 85
OR
7.5K
5K
10K 1%
10K 1%
100n
100n
M+
10uf 16v
10uF 16V
M-
-9V
+9V
ESR METER 100kHz