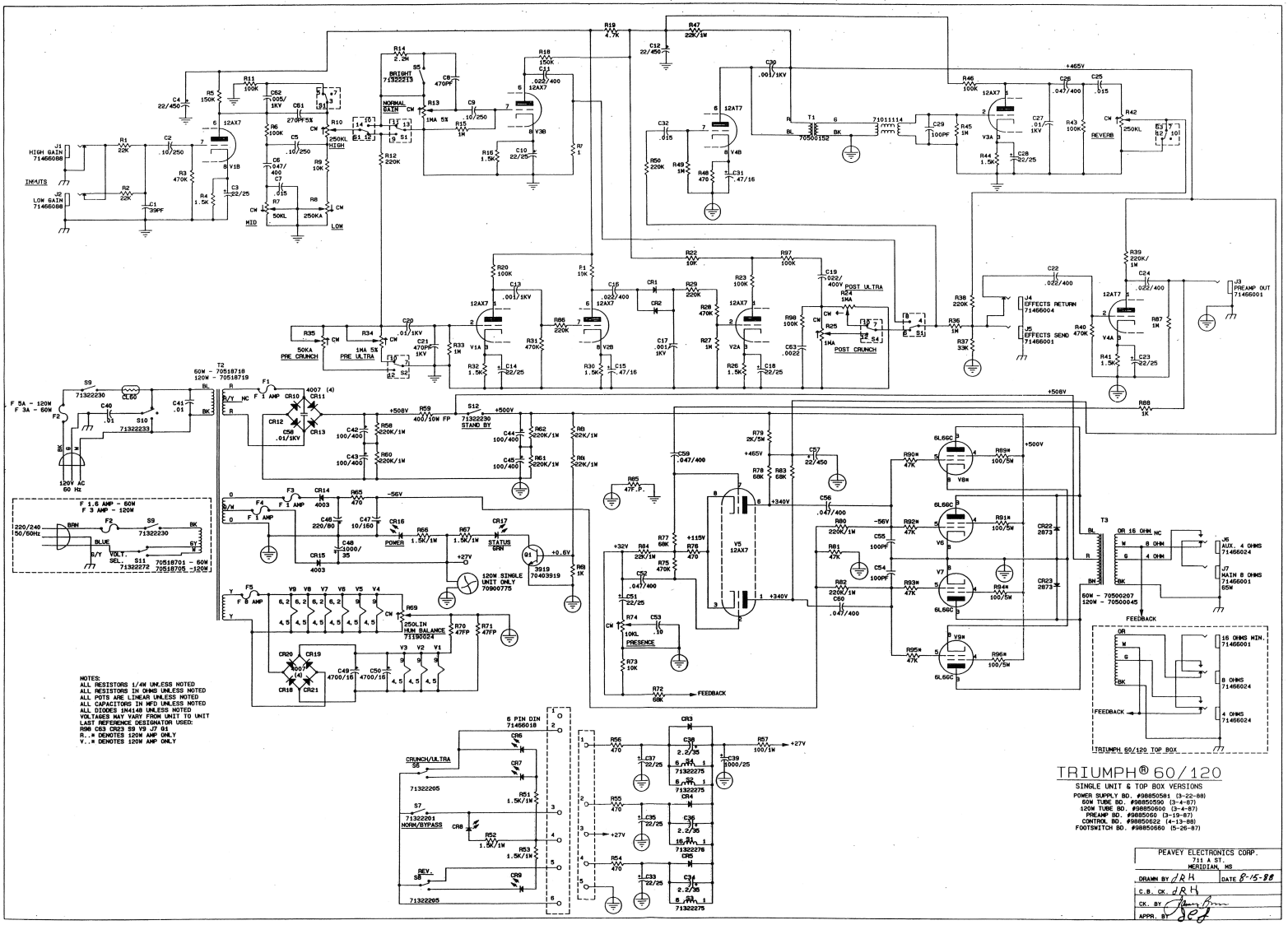

TRIUMPH® 60/120

SINGLE UNIT & TOP BOX VERSIONS

POWER SUPPLY BD. #98850581 (3-22-88)
60W TUBE BD. #98850590 (3-4-87)
120W TUBE BD. #98850600 (3-4-87)
PREAMP BD. #98850560 (3-19-87)
CONTROL BD. #98850622 (4-13-88)
FOOTSWITCH BD. #98850660 (5-26-87)

PEAVEY ELECTRONICS CORP.
711 A ST.
MERIDIAN, MS

DRAWN BY	JRH	DATE 8-15-88
C.B. CK.	JRH	
CK. BY		
APPR. BY		