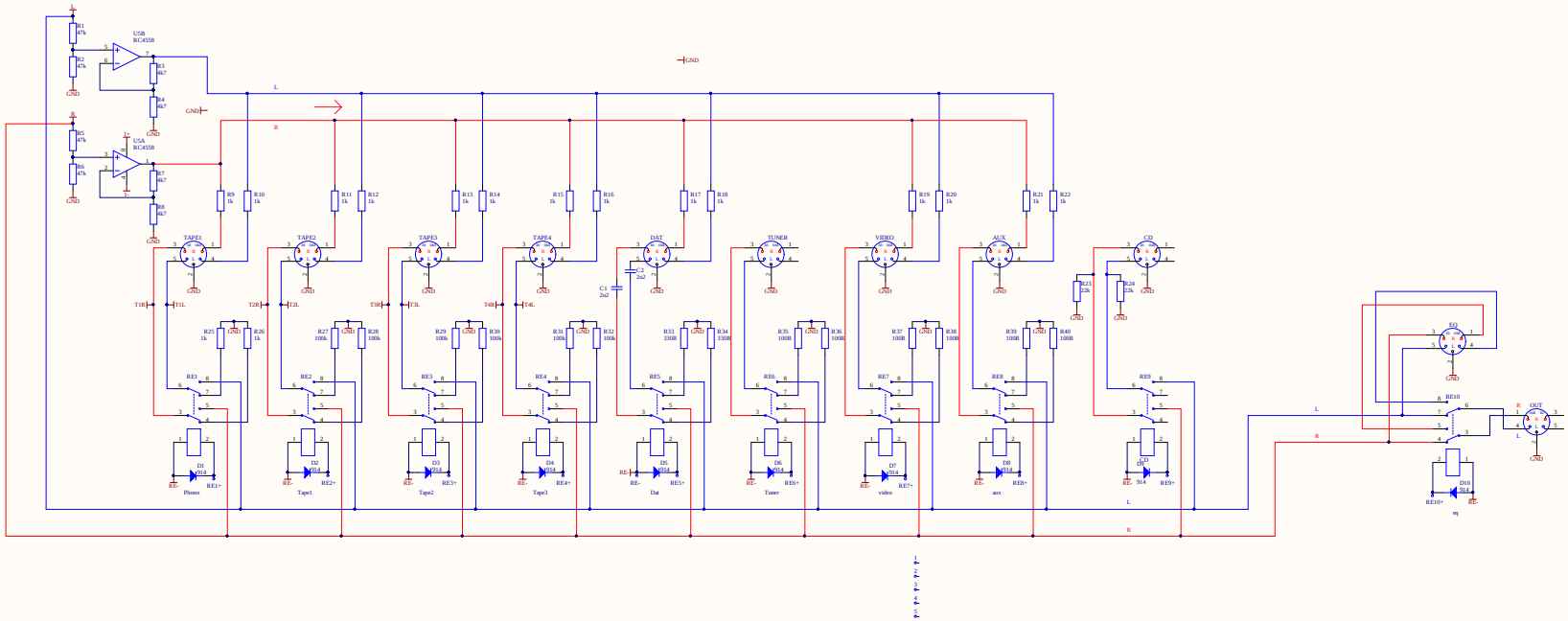

Title			
Size: A1	Number		Revision
Date: 2024-08-27		Sheet of	
File: E:\Ayush\YT_input\EVT_input1.SchDoc		Drawn By:	