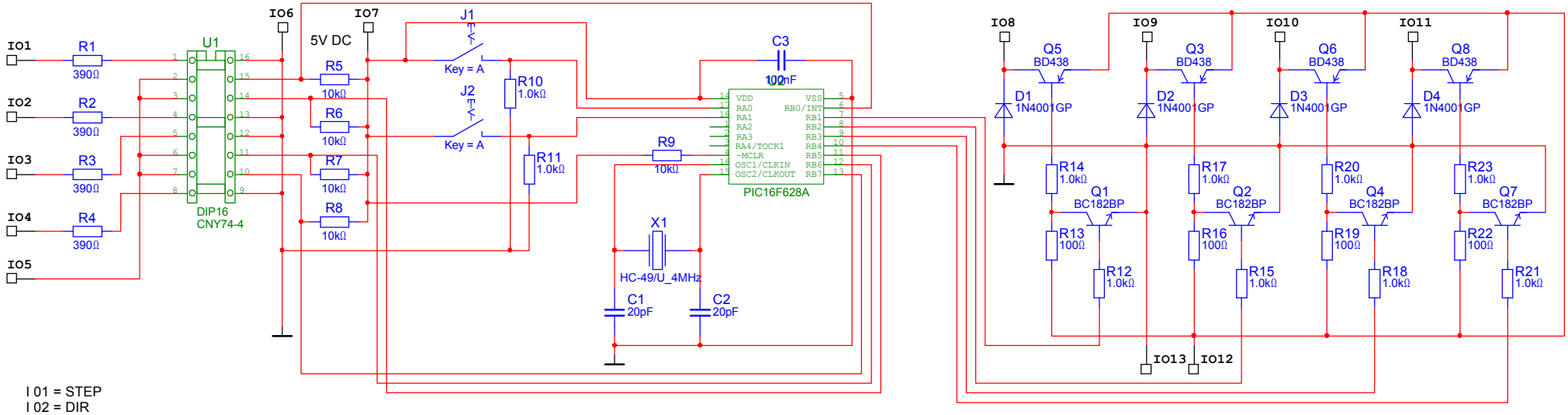

I 01 = STEP
I 02 = DIR
I 03 = ENABLE
I 04 = NORMAL / MIKRO
I 05 = PC GND
I 06 = 5V GND
I 07 = + 5V
I 08 = STEPPER COIL 1
I 09 = STEPPER COIL 2
I 10 = STEPPER COIL 3
I 11 = STEPPER COIL 4
I 12 = + 12V
I 13 = 12V GND