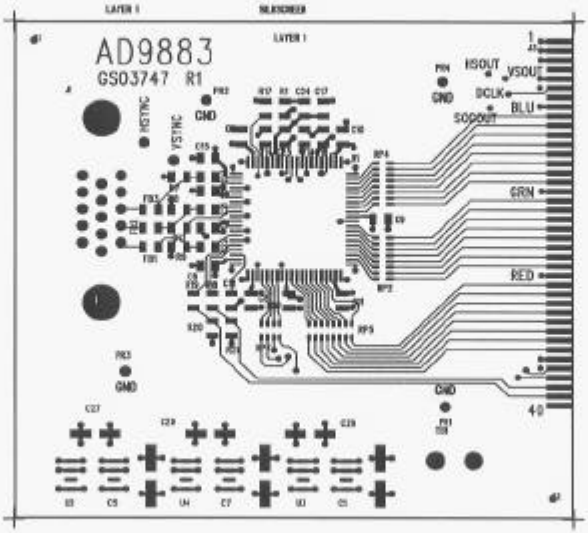
LAYER 1
SILKSCREEN
LAYER 1
AD9883
GS03747 R1
HSYNC
VSYNC
GND
HSOUT
VSOUT
SCLK
SOGOUT
BLU
GRN
RED
GND
GND
1
40

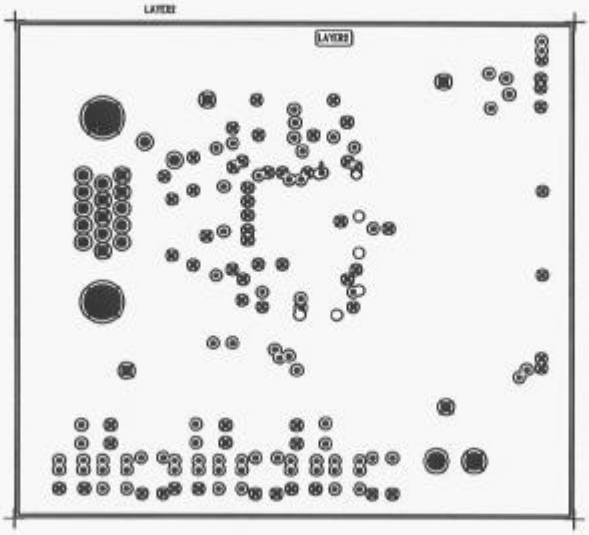
LAYER2
LAYER2

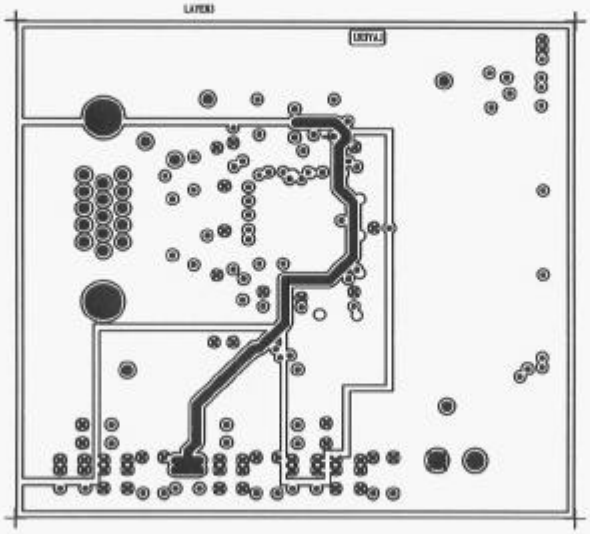
LAYER1
U17V.J

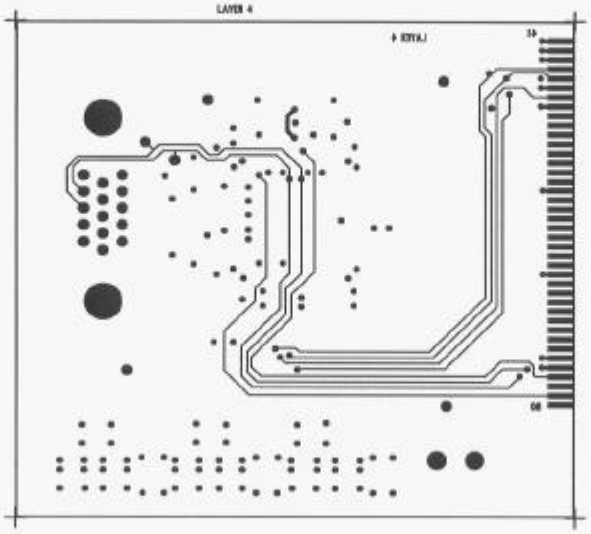
LAYER 4