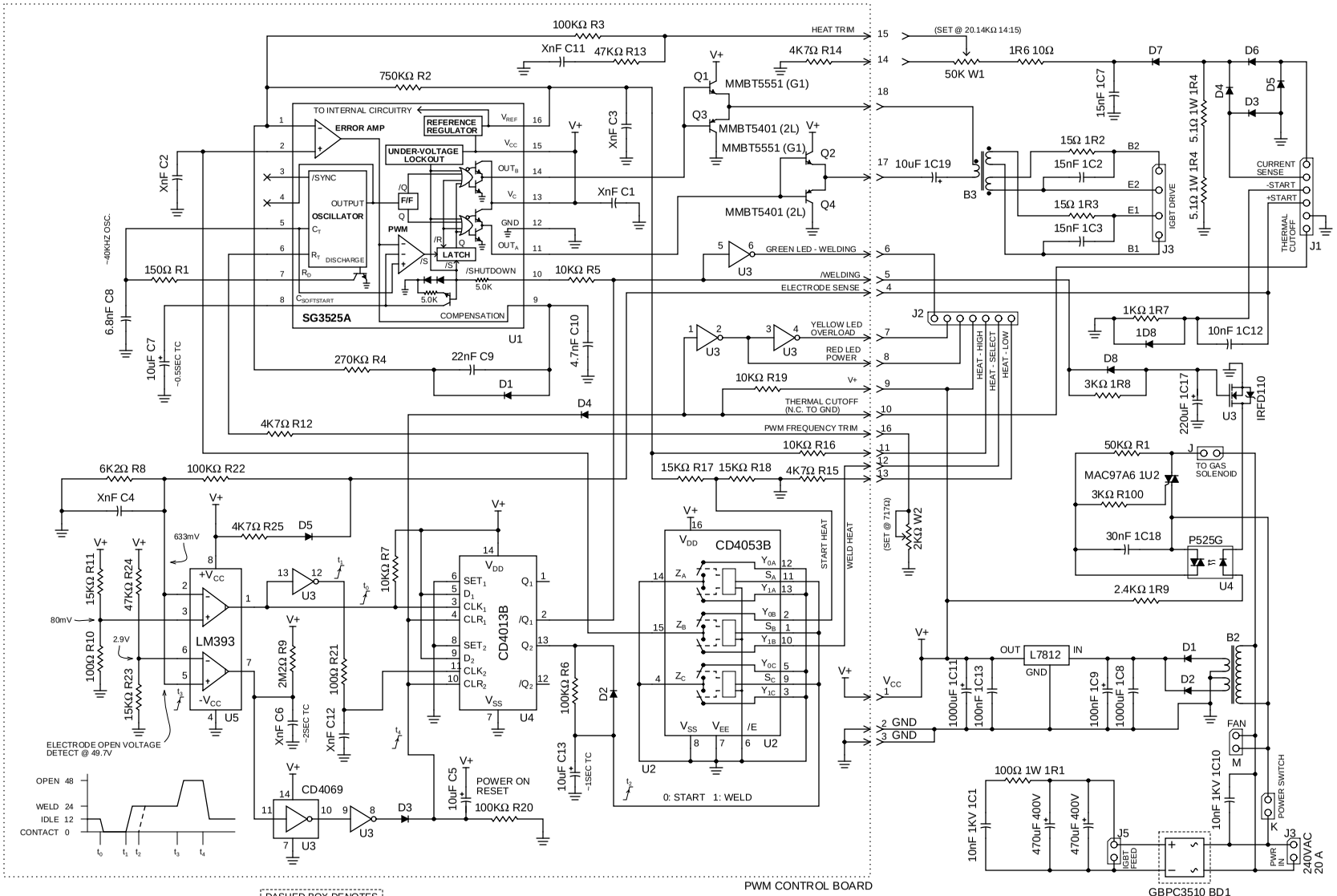

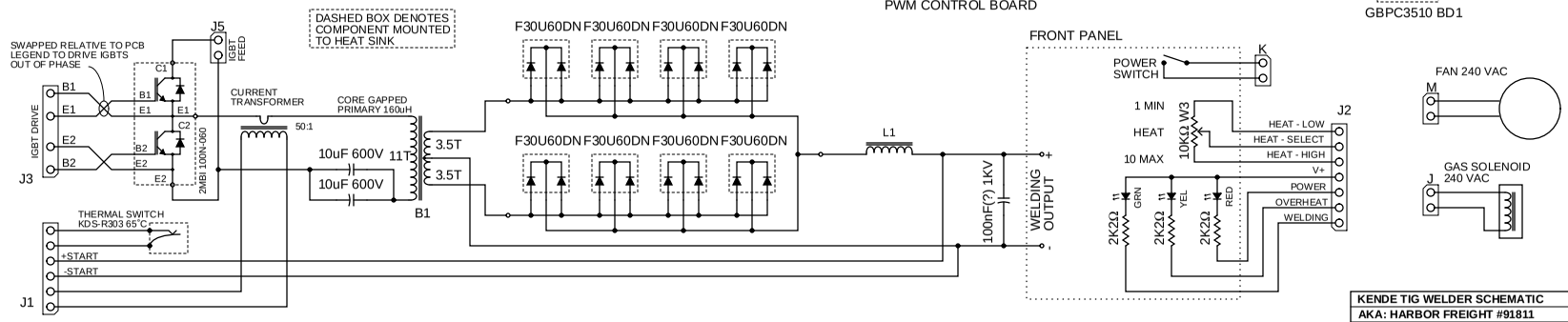

KENDE TIG WELDER SCHEMATIC	PAGE 1 of 2	REV 0.4
AKA: HARBOR FREIGHT #91811		
Reverse IP by uhmgawa@opensource-engineering.com		

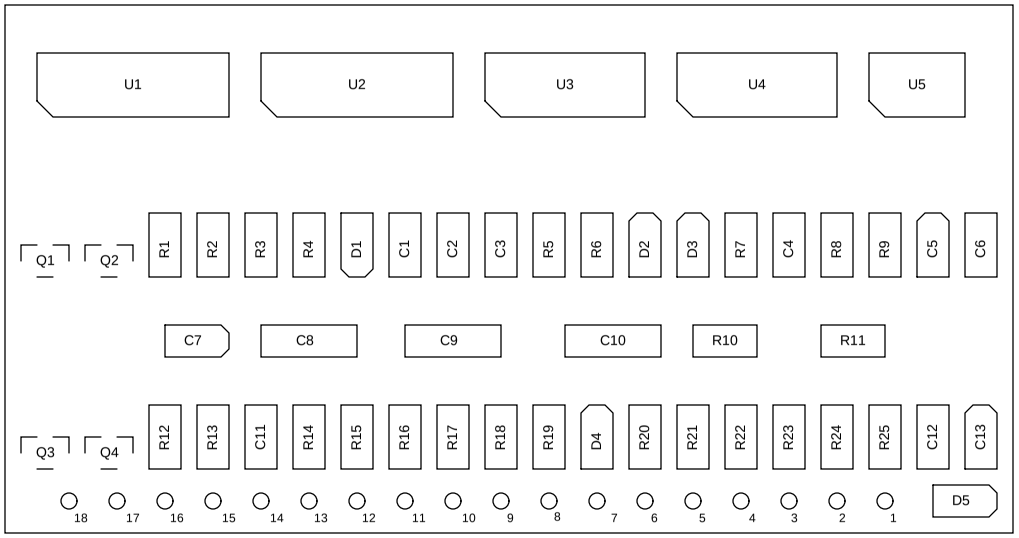

KENDE TIG WELDER SCHEMATIC	PAGE 2 of 2	REV 0.4
AKA: HARBOR FREIGHT #91811		
Reverse IP by uhmgawa@opensource-engineering.com		