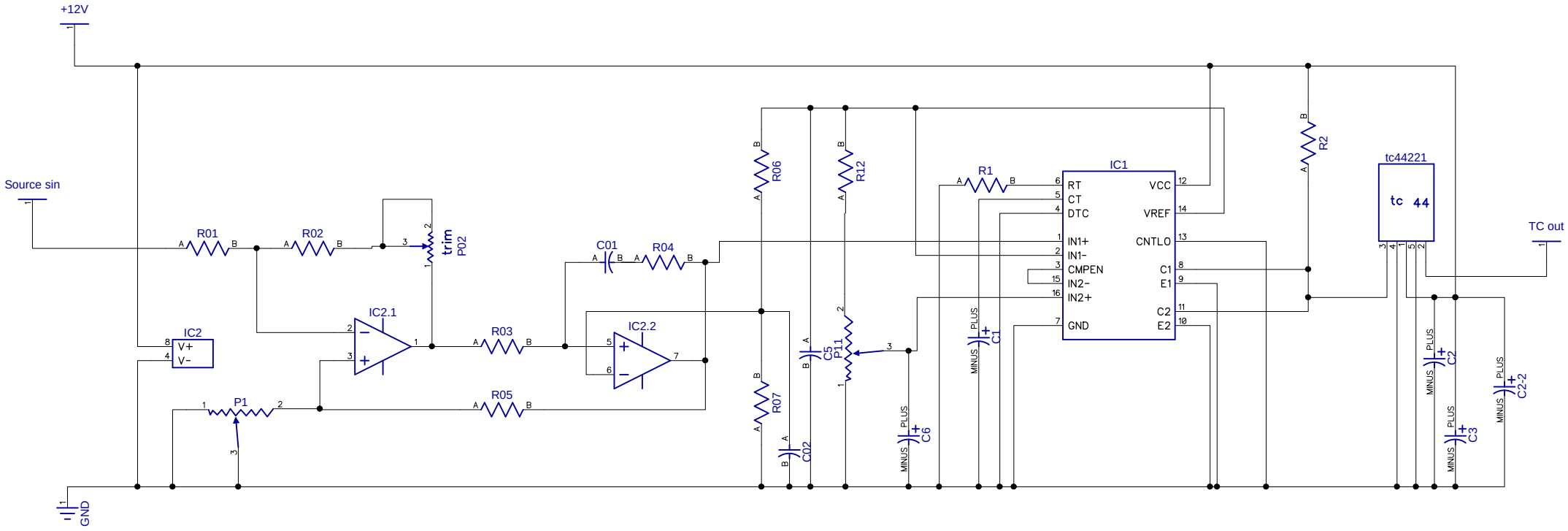
+12V
Source sin
R01
R02
trim
P02
IC2
V+
V-
IC2.1
R03
P1
R05
C01
R04
IC2.2
R06
R07
C02
C5
P11
R12
R1
IC1
RT
CT
DTC
IN1+
IN1-
CMPEN
IN2-
IN2+
GND
VCC
VREF
CNTLO
C1
E1
C2
E2
C1
C6
R2
tc44221
tc 44
TC out
C2
C3
C2-2
PLUS
MINUS
GND