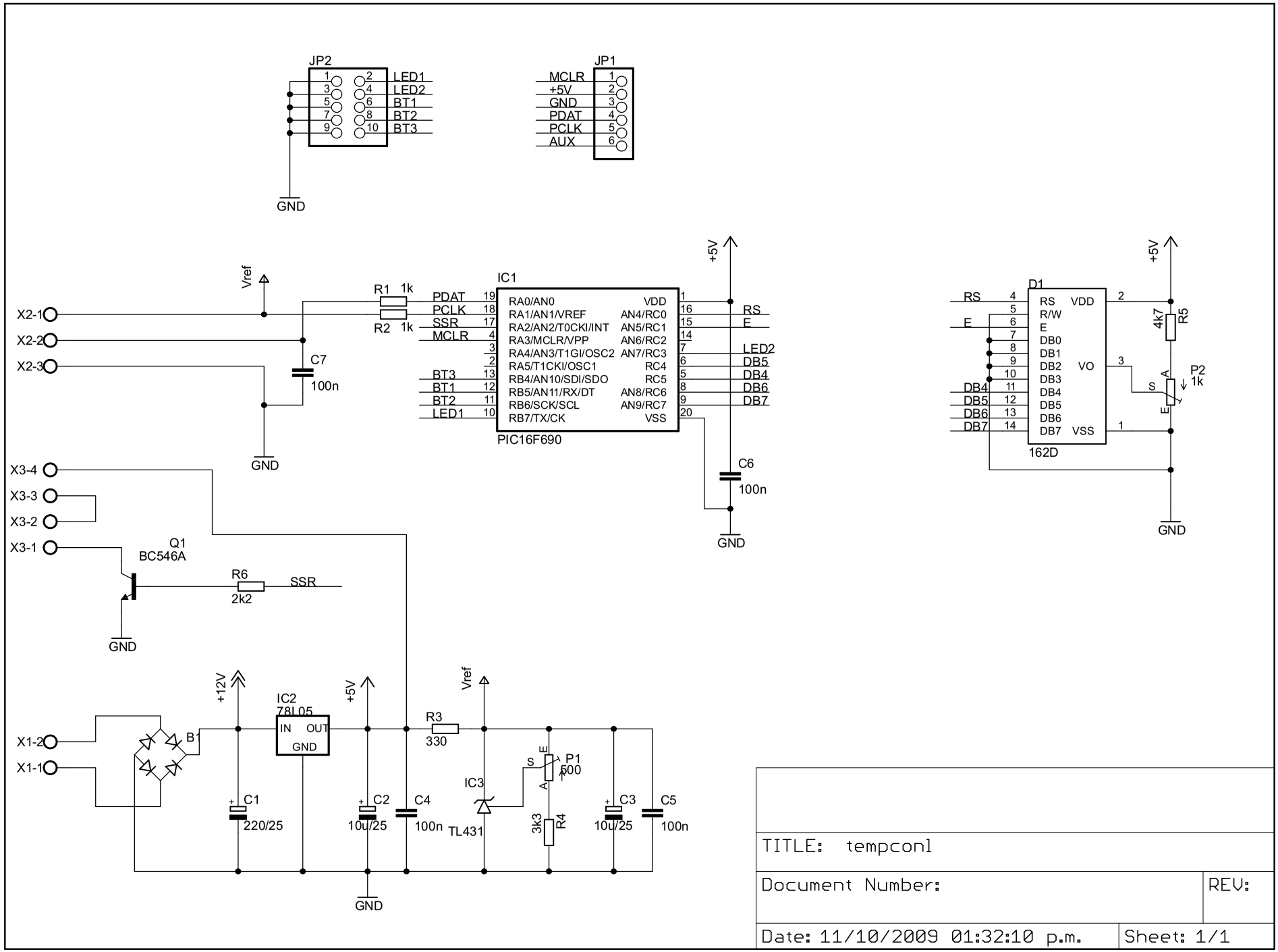
JP2
LED1
LED2
BT1
BT2
BT3
GND
JP1
MCLR
+5V
GND
PDAT
PCLK
AUX
IC1
PIC16F690
RA0/AN0
RA1/AN1/VREF
RA2/AN2/T0CKI/INT
RA3/MCLR/VPP
RA4/AN3/T1GI/OSC2
RA5/T1CKI/OSC1
RB4/AN10/SDI/SDO
RB5/AN11/RX/DT
RB6/SCK/SCL
RB7/TX/CK
VDD
AN4/RC0
AN5/RC1
AN6/RC2
AN7/RC3
RC4
RC5
AN8/RC6
AN9/RC7
VSS
R1 1k
R2 1k
C7
100n
C6
100n
X2-1
X2-2
X2-3
X3-4
X3-3
X3-2
X3-1
Q1
BC546A
R6
2k2
SSR
D1
162D
RS
R/W
E
DB0
DB1
DB2
DB3
DB4
DB5
DB6
DB7
VO
4k7
R5
P2
1k
IC2
78L05
IN
OUT
GND
+12V
Vref
X1-2
X1-1
B1
C1
220/25
C2
10u/25
C4
100n
R3
330
IC3
TL431
P1
500
3k3
R4
C3
10u/25
C5
100n
TITLE: tempconl
Document Number:
REV:
Date: 11/10/2009 01:32:10 p.m.
Sheet: 1/1