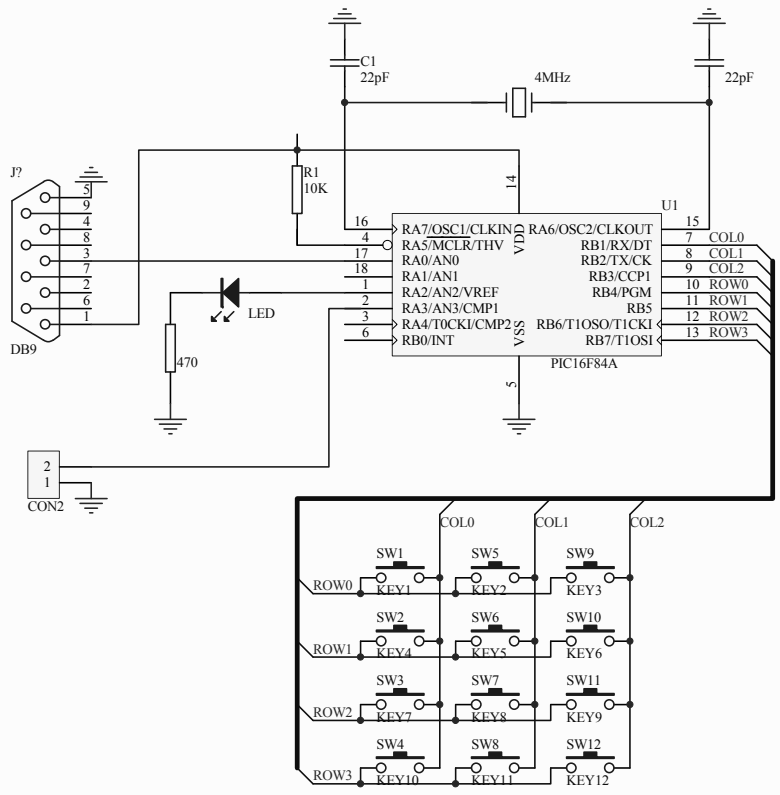

1. sz. melléklet

Title	Billentyűzet mátrix	
Size A4	Number	Revision
Date: 8-Nov-2009		Sheet of
File: C:\DOCUME~1\..\MATRIX.SCH		Drawn By: