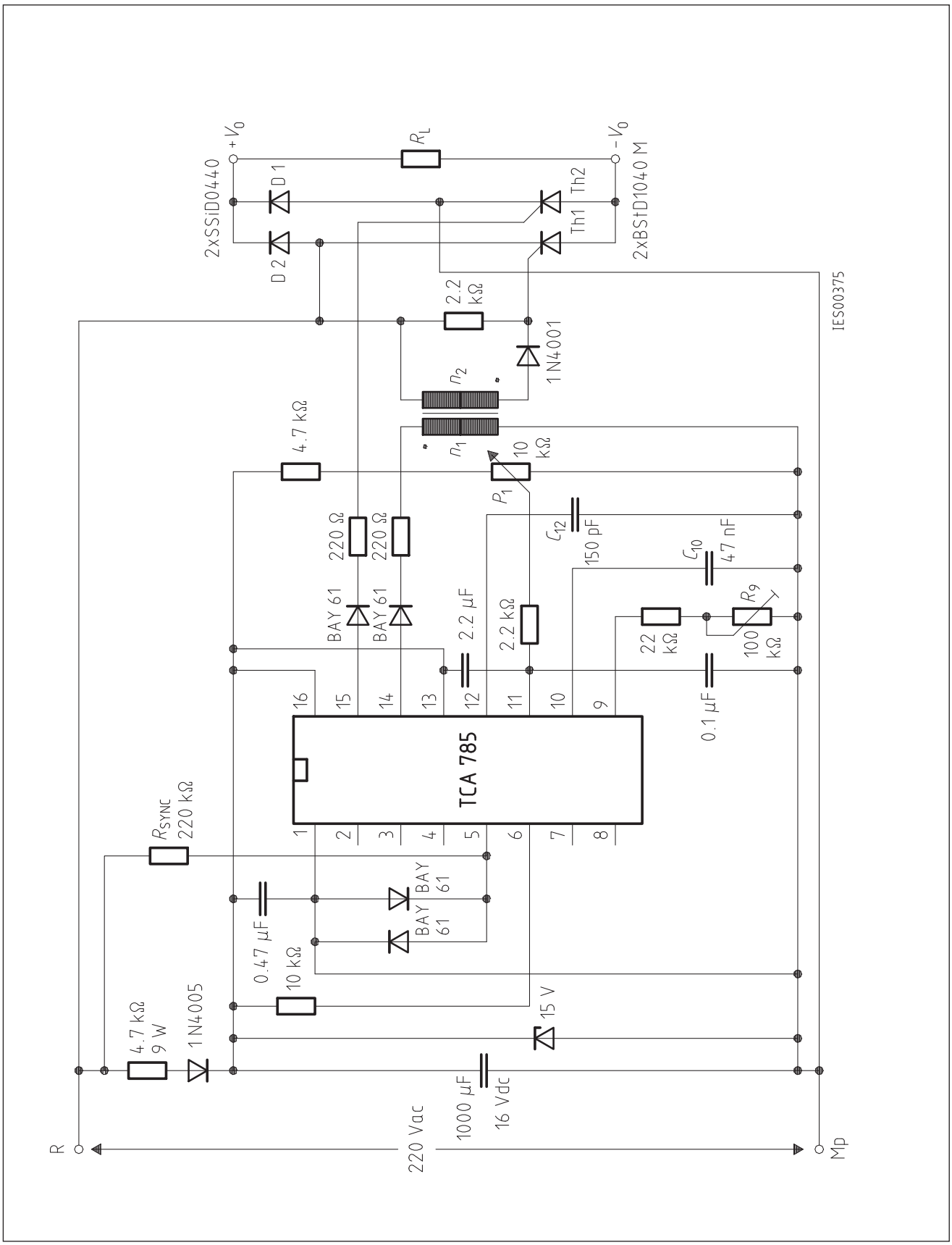

Half-Controlled Single-Phase Bridge Circuit with Trigger Pulse Transformer and Direct Control for Low-Power Thyristors