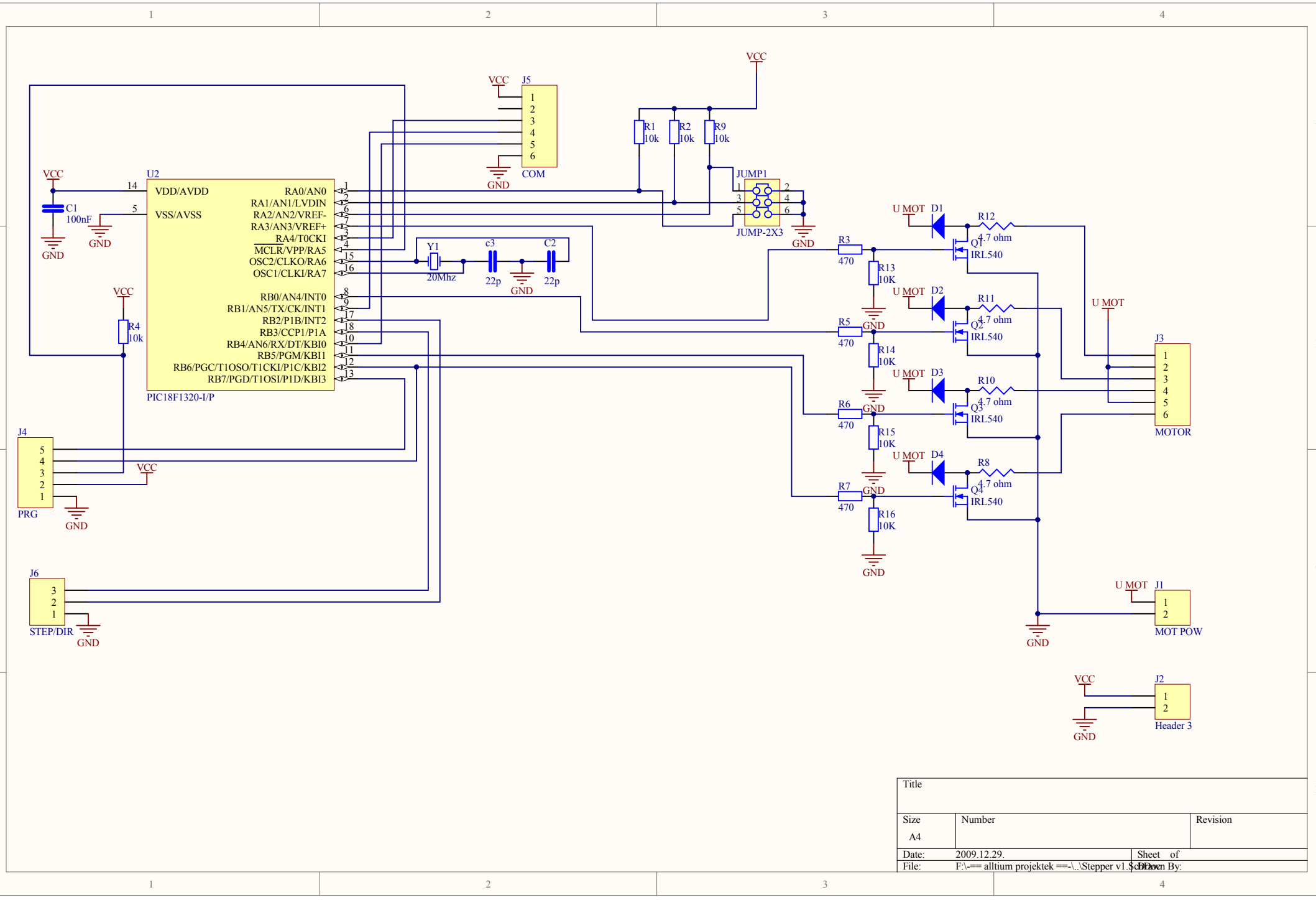

Title		
Size A4	Number	Revision
Date: 2009.12.29.		Sheet of
File: F:\-== alltium projektek ==-\..\Stepper v1.SchDoc		Drawn By:

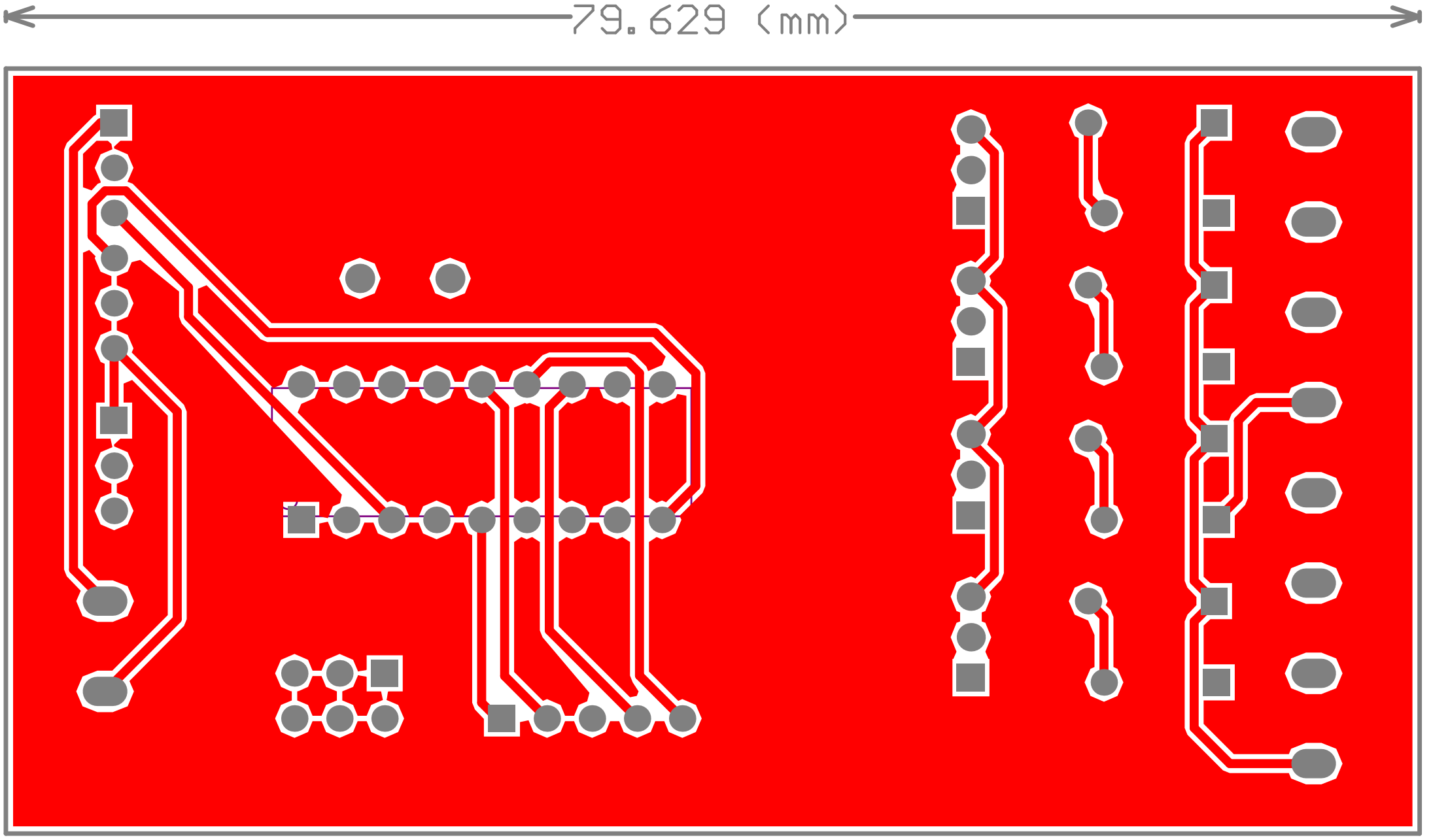
79.629 (mm)

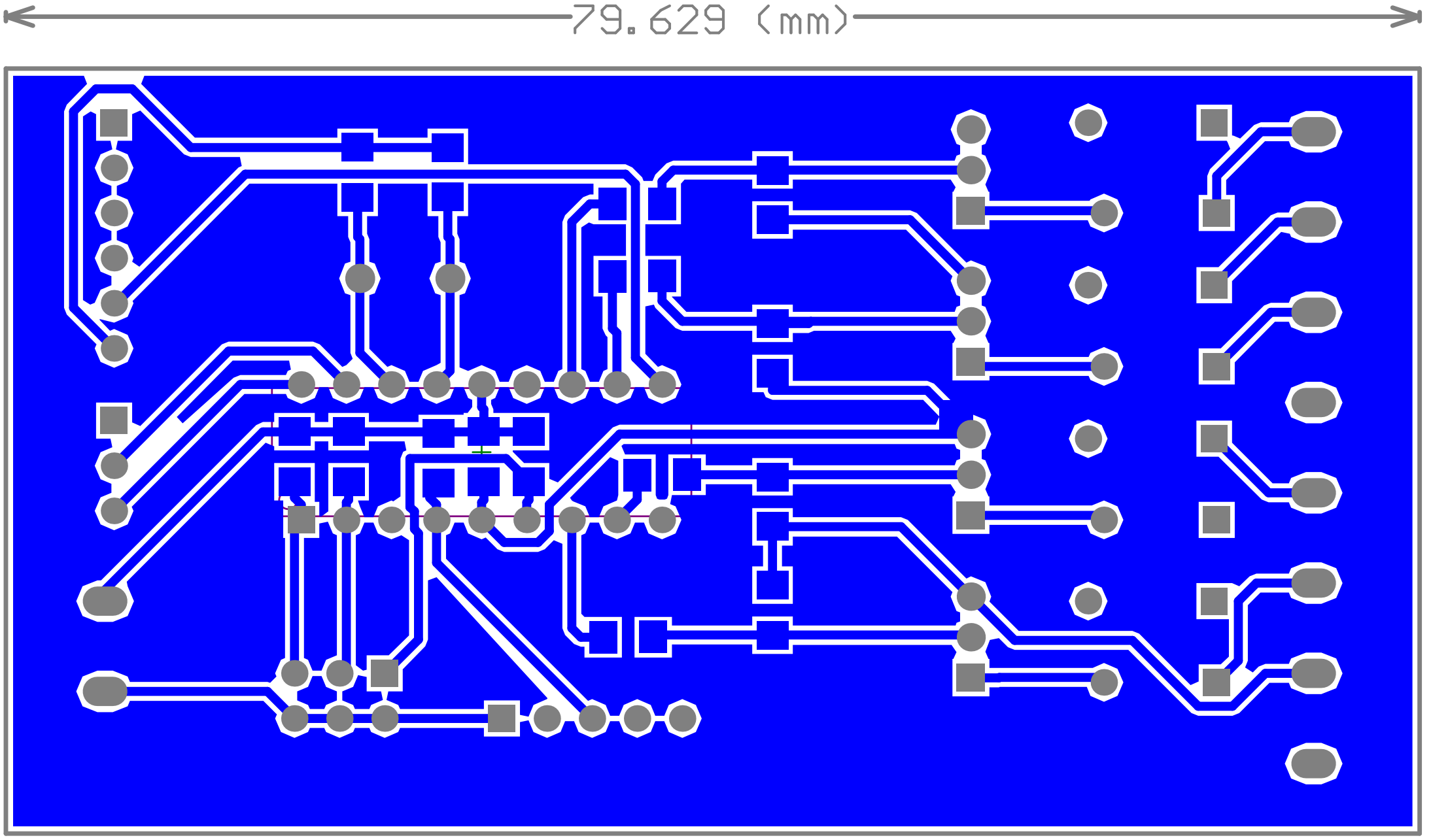
79.629 (mm)

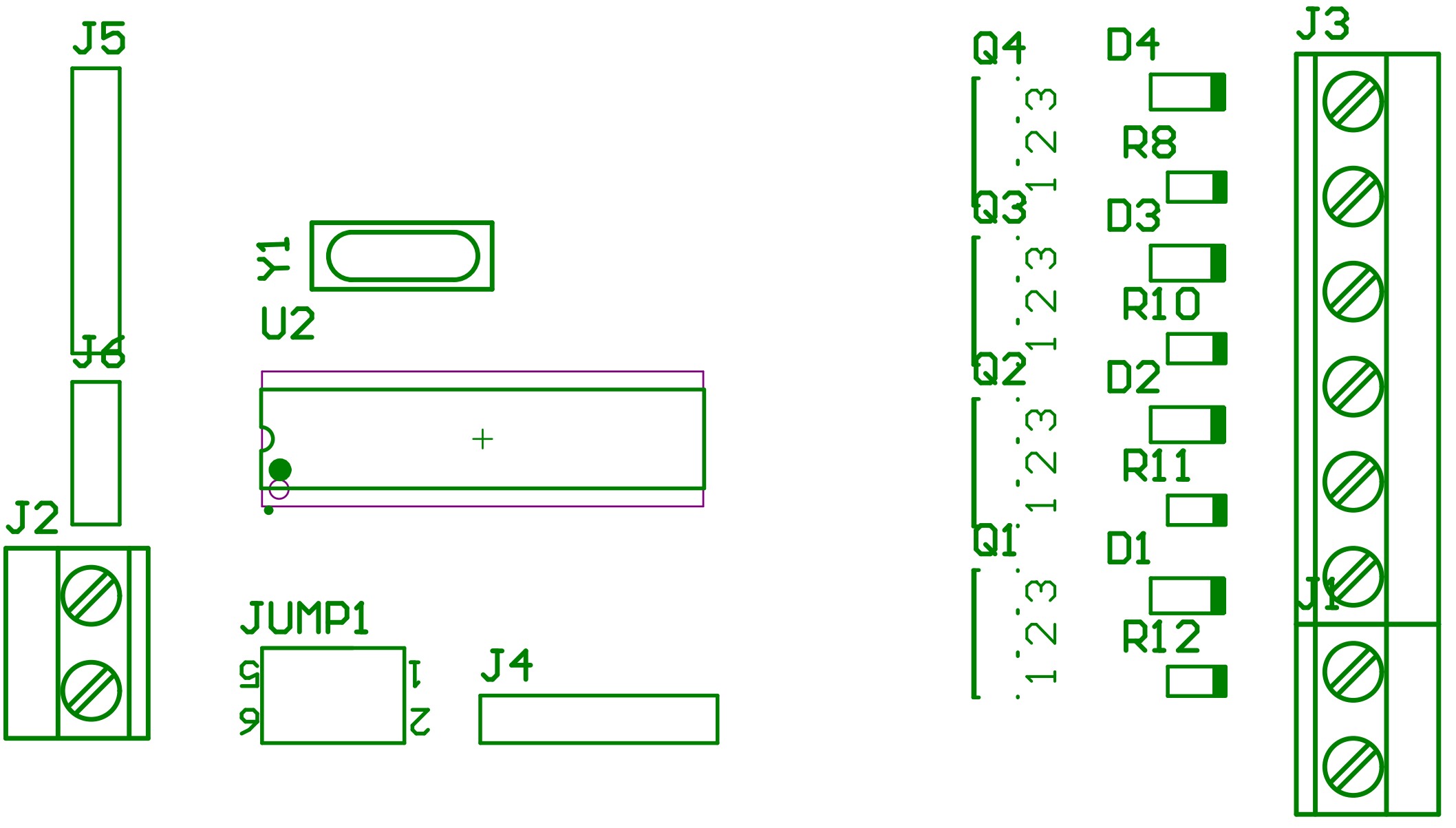
J5
J6
J2
Y1
U2
JUMP1
5
1
6
2
J4
Q4
1 2 3
Q3
1 2 3
Q2
1 2 3
Q1
1 2 3
D4
R8
D3
R10
D2
R11
D1
R12
J3
J1