7. Schematic Diagram

7-1 CD/MP3 Part

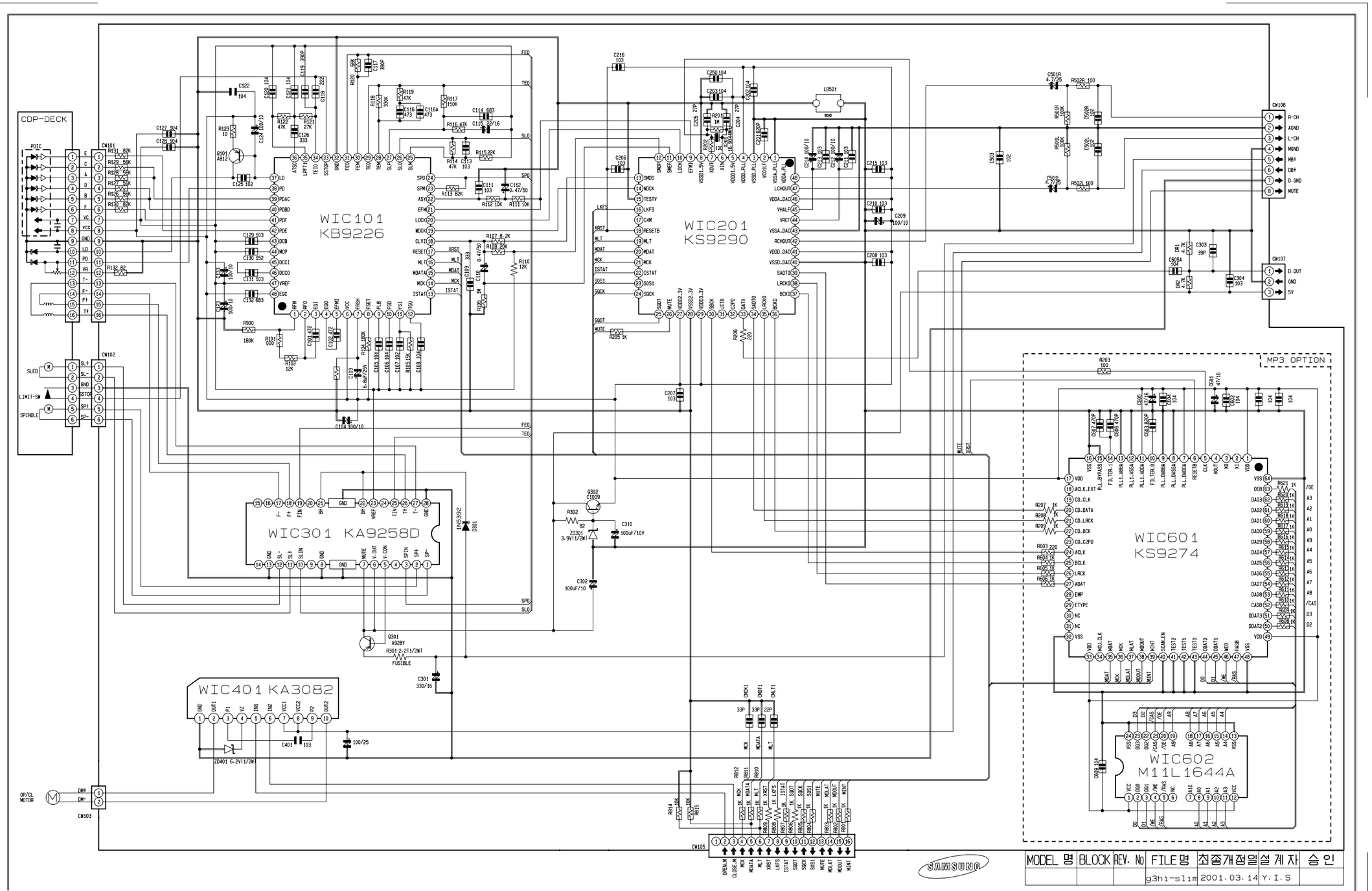

7-2 MAIN Part

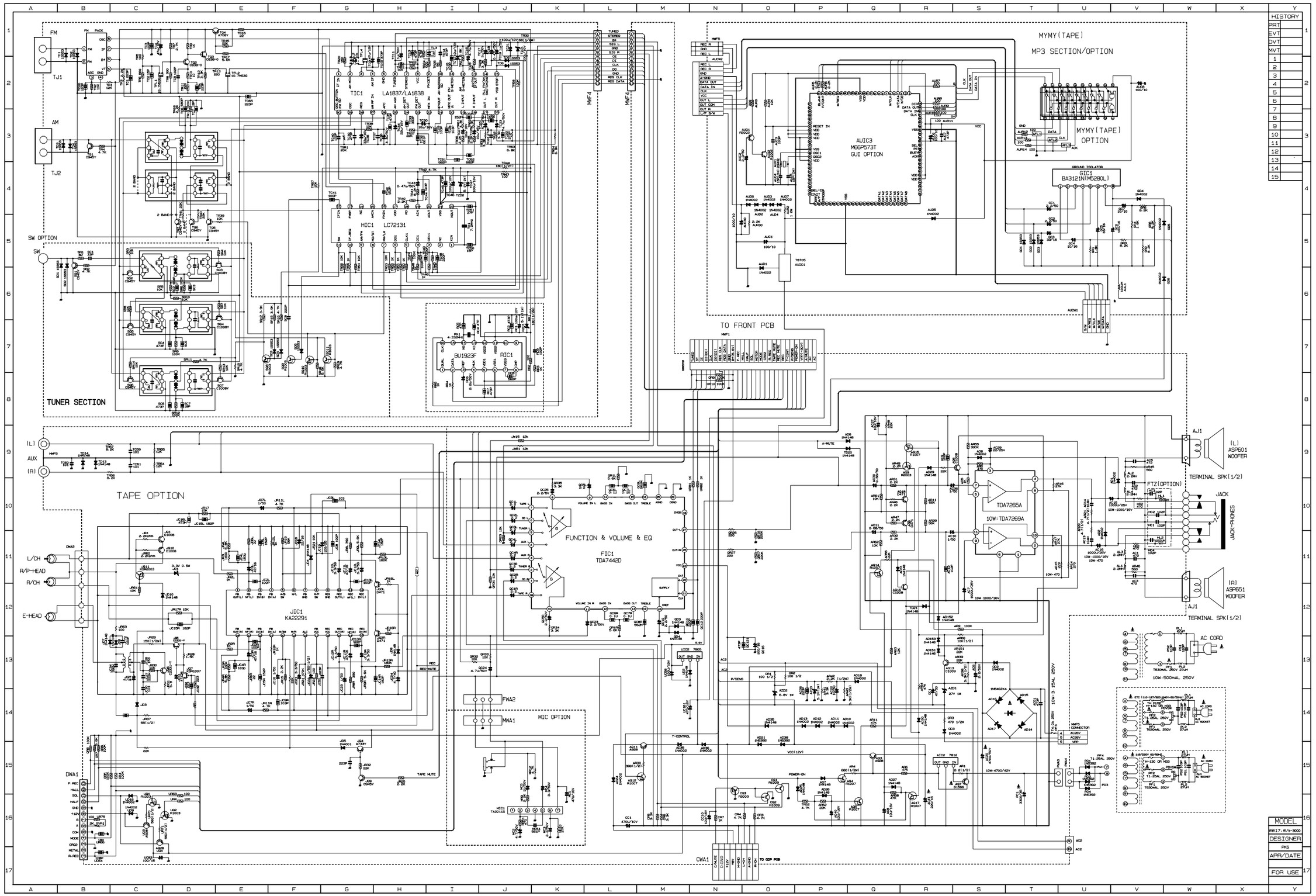
FM
TJ1
AM
TJ2
SW OPTION
SW
TUNER SECTION
TIC1
LA1837/LA1838
HIC1
LC72131
RIC1
BU1923F
MYMY(TAPE)
MP3 SECTION/OPTION
MYMY(TAPE)
OPTION
AUIC3
M66P573T
GUI OPTION
GIC1
BA3121(M5280L)
TO FRONT PCB
(L)
AUX
(R)
TAPE OPTION
L/CH
R/P-HEAD
R/CH
E-HEAD
JIC1
KA22291
FUNCTION & VOLUME & EQ
FIC1
TDA7442D
FWA2
MWA1
MIC OPTION
TDA7265A
10W·TDA7269A
AJ1
(L)
ASP601
WOOFER
TERMINAL SPK(1/2)
JACK
JACK-PHONES
(R)
ASP651
WOOFER
AC CORD
DWA1
CWA1
TO CDP PCB
MODEL
DESIGNER
APR/DATE
FOR USE
HISTORY
PRT
EVT
DVT
MVT

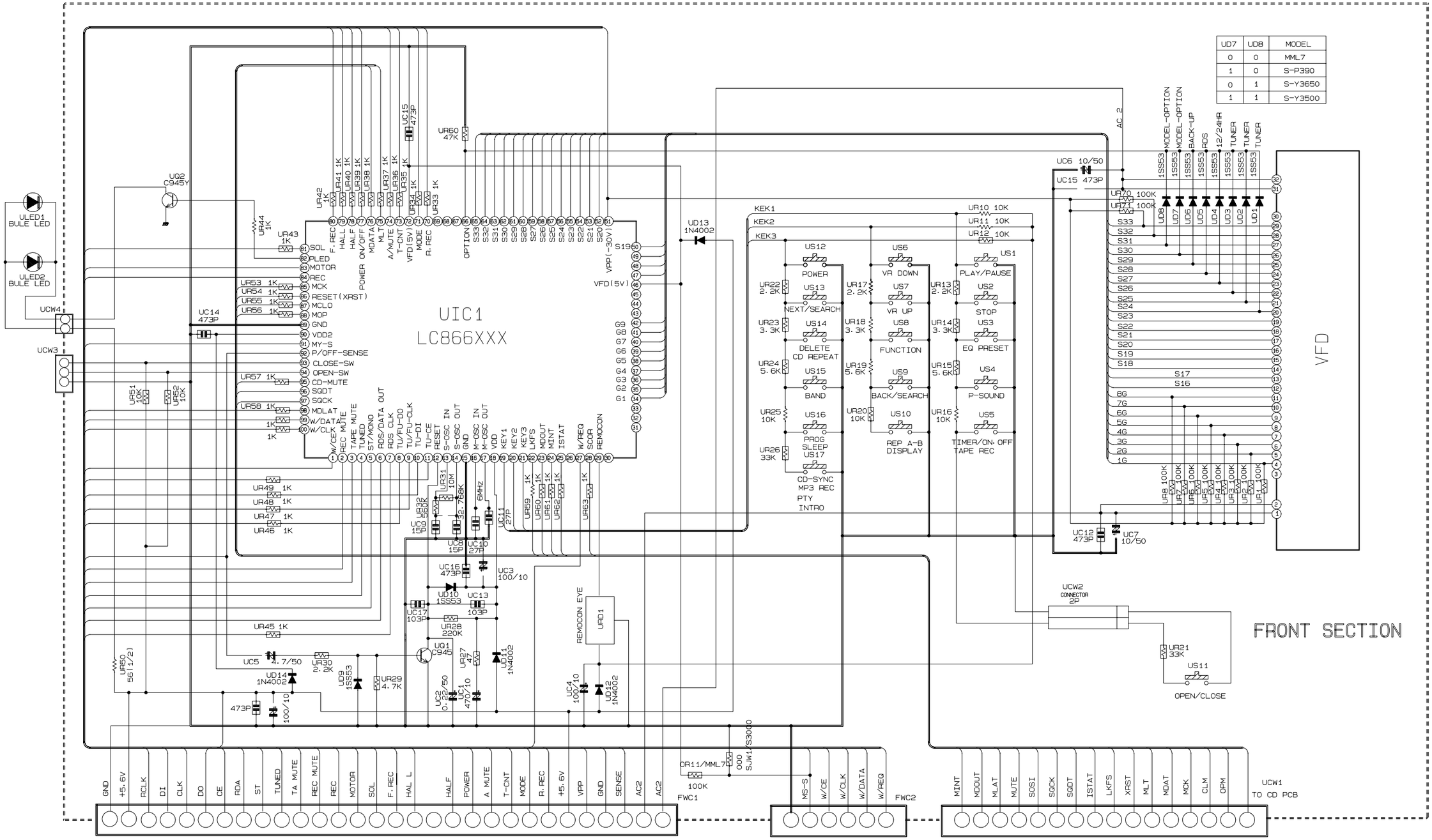

UD7	UD8	MODEL
0	0	MML7
1	0	S-P390
0	1	S-Y3650
1	1	S-Y3500