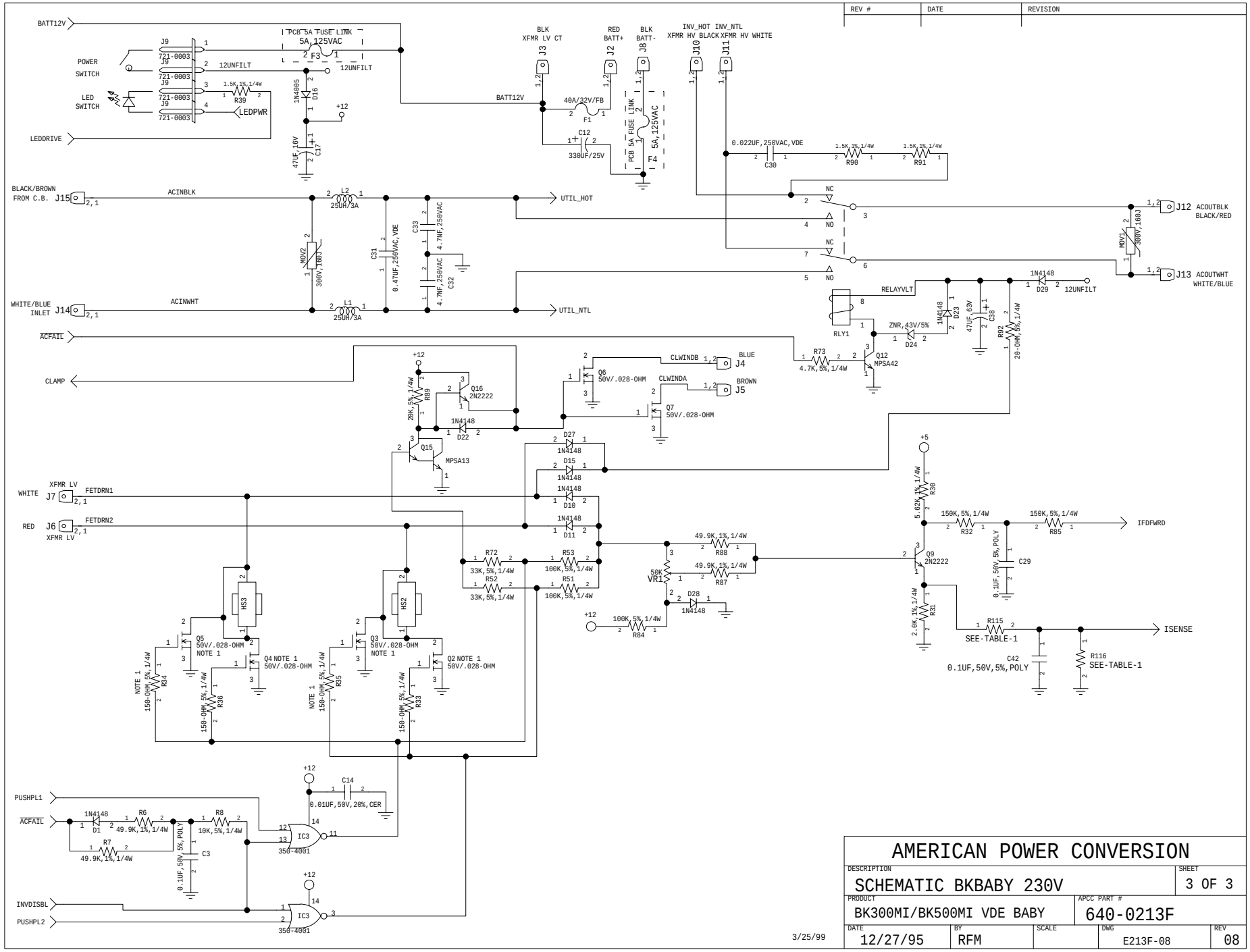

AMERICAN POWER CONVERSION

DESCRIPTION: SCHEMATIC BKBABY 230V				SHEET: 3 OF 3
PRODUCT: BK300MI/BK500MI VDE BABY			APCC PART #: 640-0213F	
DATE: 12/27/95	BY: RFM	SCALE:	DWG: E213F-08	REV: 08