DISTO-UNO

Rev.Feb.20.2004

BOSS DS1 workalike: Both the older and newer versions can be built on this layout, choose the components from the parts list for either one. Trademarks remain property of their owners.

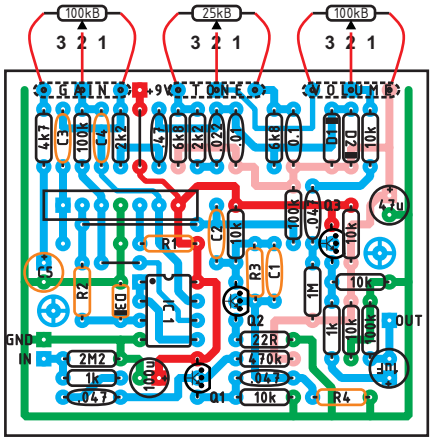

LAYOUT

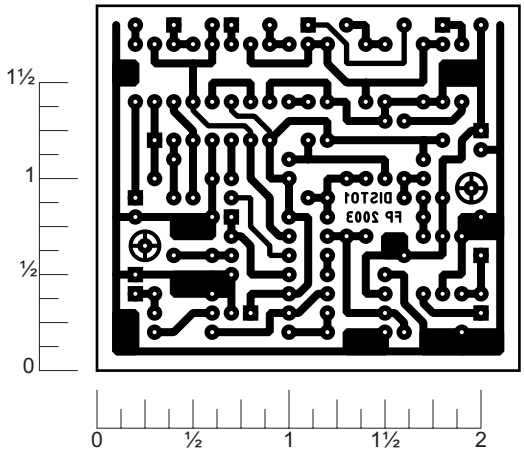

READY TO TRANSFER

Parts List (common)

Resistors
1 - 22ohm
2 - 1k
2 - 2.2k (2k2)
1 - 4.7k (4k7)
2 - 6.8k (6k8)
6 - 10k
3 - 100k
2 - 470k
1 - 1M
1 - 2.2M (2M2)

Pots
2 - 100k Lin
1 - 25k Lin

Capacitors
1 - 100 µF
1 - 47 µF
1 - 1 µF
1 - 0.01 µF
1 - 0.022 µF
3 - 0.047 µF
1 - 0.47 µF
1 - 0.1 µF

Diodes
2 - 1N914

Transistors
3 - 2N5088

Parts List (TA7136P)

Resistors
R1 - 27k
R2 - empty
R3 - 470k
R4 - 100k

Capacitors
C1 - 250 pF
C2 - 0.47 µF
C3 - 150 pF
C4 - 250pF
C5 - 1 µF

IC's/etc
IC1 - empty
IC2 - TA7136P
D3 - empty

Parts List (TL072)

Resistors
R1 - empty
R2 - 47k
R3 - 100k
R4 - 1M

IC's
IC1 - TL072
IC2 - empty
D3 - 1N914

Capacitors
C1 - 470 pF
C2 - 0.068 µF
C3 - empty
C4 - 100pF
C5 - 0.47 µF

Layout and presentation by Francisco Peña 2001 - 2004®.
All rights reserved. Authorization for personal use only,
any commercial use is forbidden.
Permission for posting/serving limited to
http://www.tonepad.com
Permission refused for posting from other sites.
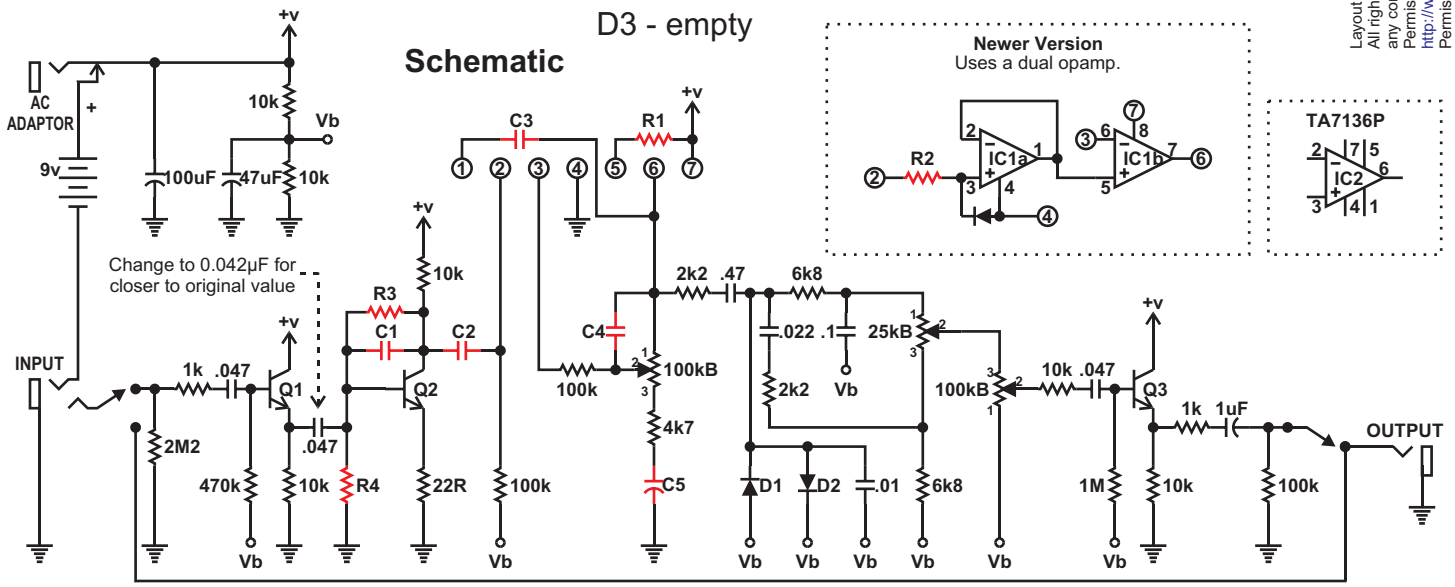
Schematic